CLW-2424-W2E-2555-ER
series

■ **Features:**

- *Universal AC input / Full range*
- *ErP step II / CEC level VI compliance*
- *No load power consumption P < 0.075W*
- *Protections: Overload / Short circuit / Over Voltage*

CONSTANT VOLTAGE

ELECTRICAL SPECIFICATION

MODEL	CLW-2424-W2E-2555-ER
OUTPUT	
Rated Voltage	24V
Rated Current	1A
Current Range	0 ÷ 1A
Rated Power	24W
Line Regulation	± 1%
Load Regulation	± 5%
Tolerance [3]	± 8%
Ripple & Noise (max.) [2]	$200mV_{P-P}$
Setup, Rise Time [4]	5000ms, 30ms / 230VAC at full load
Hold up Time (typ.)	4ms / 230VAC at full load
INPUT	
Voltage Range	90 ÷ 264VAC
Frequency Range	47 ÷ 63Hz
Efiiciency (typ.)	86.8%
AC Current (typ.)	0.8A / 115VAC, 0.4A / 230VAC
No load Power Consumption (max.)	0.075W
PROTECTIONS	
Overload	Range: 105-200%
	Auto-recovery.
Short Circuit	Type: hiccup mode, auto-recovery.
Over Voltage	Type: auto-recovery.

CLW-2424-W2E-2555-ER
series

WORKING ENVIRONMENT	
Working Temperature	0°C ÷ 40°C
Working Humidity	10 ÷ 90% RH non-condensing
Storage Temperature and Humidity	-20°C ÷ 85°C, 5 ÷ 90% RH non-condensing

SAFETY and EMC REGULATIONS	
Safety Standards	Compliance to EN 60950-1
Withstand Voltage	IN/OUT: 3.6kVAC
Isolation Resistance	IN/OUT: 50MΩ/500VDC/25°C/70%
EMC Emission	Compliance to EN55032
EMC Immunity	Compliance to EN61000-4-2, -3, -4, -5
Harmonic Current	Compliance to EN61000-3-3; EN61000-3-2

OTHERS		
DC wire and plug	Wire: 24AWG*2C, length = 1500mm	Plug: **2.5/5.5**, positive inside
Dimensions	82 x 32.6 x 74.1mm (L x W x H)	
Net Weight	111.2g	

1. All parameters NOT specially mentioned are measured at 230VAC input, rated load and 25°C of ambient temperature.
2. Ripple & noise are measured at 20MHz of bandwidth by using a 12" twisted pair-wire terminated with a 0.1μF i 47μF parallel capacitor.
3. Tolerance includes set up tolerance, line regulation and load regulation.
4. Setup and rise time is measured from 0 to 90% rated output voltage.
5.Power supply is considered as component not indented to apply by end-user. Power supply meets safety and EMC standards however the final equipment with power supply must be re-quality to comply with EMC Directives.

MECHANICAL SPECIFICATION

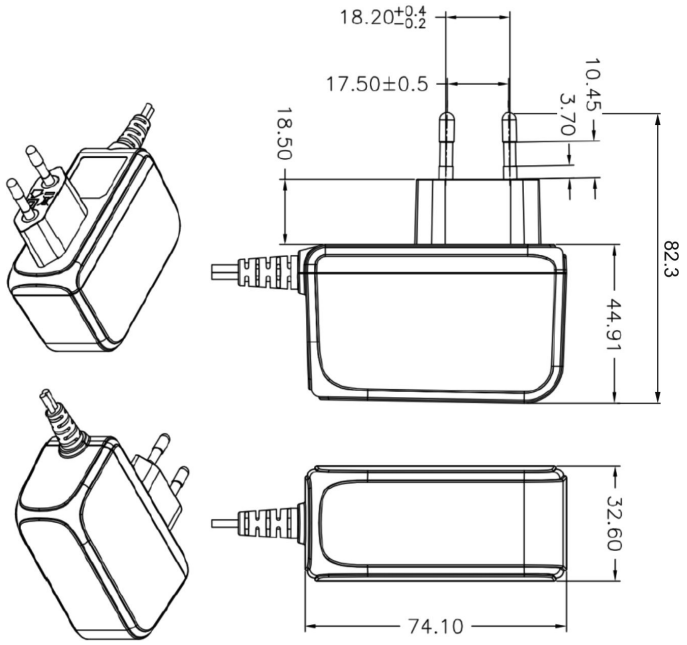
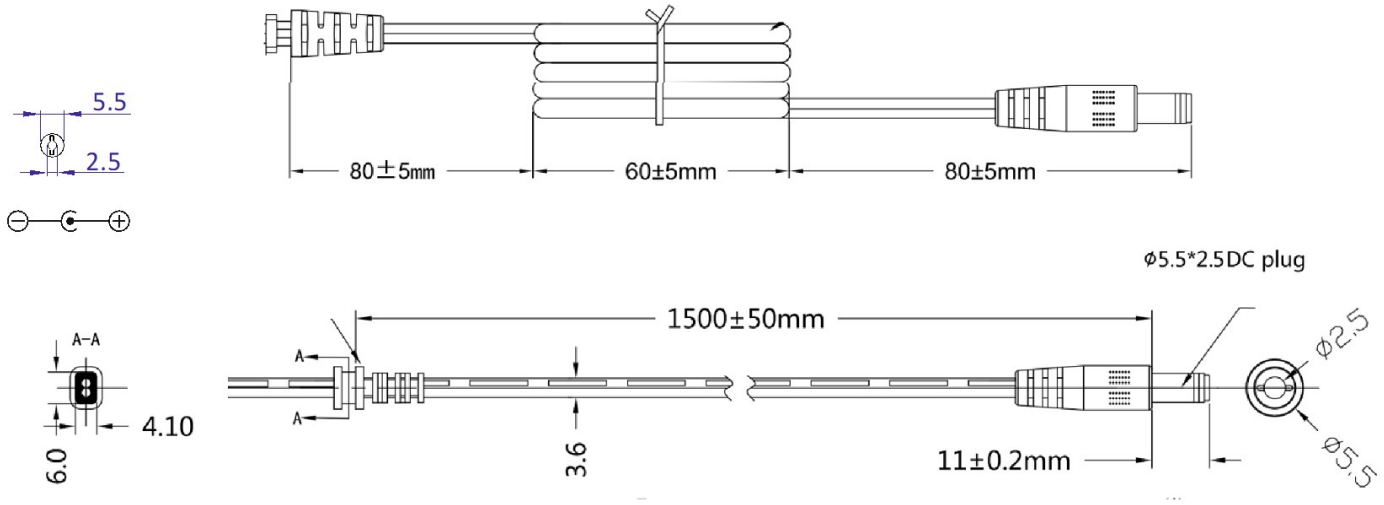
CLW-2424-W2E-2555-ER
series