E2412W2E

- premium quality plug type 12 V power supply

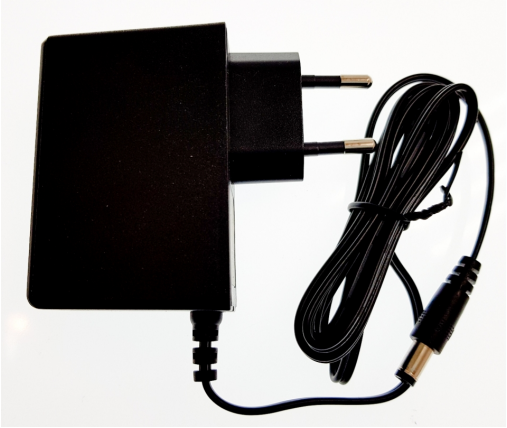

FEATURES:

- compact design
- high power output
- premium class design
- safe and reliable power source
- high efficiency ErP Ecodesign and Energy Star Level VI compliance
- no load power consumption 0.085 W

APPLICATIONS:

- consumer electronics
- IT/office equipment
- general purpose
- computer devices
- home and building automation
- security and monitoring systems
- POS, POI equipment
- telecommunications equipment

E2412W2E is a compact and efficient 24-watt wall-mounted style plug type power unit for various types of electronic devices. It is based on high quality electronic components that allow continuous, long-lasting work in all conditions. It is reliable, fully protected and stable. It provides high efficiency and excellent specification.

TECHNICAL SPECIFICATION

Group	Parameter	Value	Conditions
Input	Rated input voltage	100-240 VAC	
	Input voltage range	90-264 VAC	
	Mains frequency range	47-63 Hz	
	AC current (max.)	0.6 A	At 100 VAC and full load
	Inrush current (max.)	50 A	
	No load power consumption	0.085 W	
	Input leakage current (max.)	0.25 mA	At 264 VAC
	Power factor	0.54	
Output	Rated output voltage	12 V	
	Rated output power	24 W	
	Rated output current	2 A	
	Average efficiency	87%	At 230 VAC
	Light load efficiency	81%	At 10% rated load
	Efficiency compliance	Energy Star Level VI, ErP	
	Line regulation	±2%	
	Load regulation	±3.5%	
	Ripple and noise	120 mVp-p	At 100 VAC
	Minimal output current	No	
	Hold up time (max.)	3 ms	At 100 VAC and full load
	DC voltage rise time (max.)	30 ms	At 100 VAC and full load
	Turn on delay time (max.)	3 s	At 100 VAC and full load
Environmental	Working temperature	-5 to +40°C	
	Working humidity	5% to 95% RH	40°C
	Storage temperature	-40°C to +85°C	
	Cooling method	Free air circulation	
Protection	Short circuit	Yes	
	Overcurrent	Yes, 120-140%	
	Output overvoltage	Yes	
	Automatic recovery on fault remove	Yes	
Safety and EMC	Withstand isolation voltage	3 kVAC (input to output)	5 mA, 1 min
	Isolation resistance	100 MΩ	500 VDC
	Isolation class	2	
	Safety compliance	EN62368-1	
	EMC compliance	EN55032 class B EN61000-4	
	Marking	RoHS, CE	
Mechanical and features	Enclosure	Black ABS plastic	
	Size	70 x 30 x 64 mm	L × W × H
	Weight	130 g	
	Output connector	DC Jack 2.1 × 5.5 × 10 mm	Plus in the middle
	Input connector	EU 2-pole plug	
	Output cable	1.5 m	0,52 mm²
	Single package	100 × 90 × 35 mm	
	Packing	472 × 310 × 290 mm	126 items
	Manufacturing	China	
	Warranty	2 years	

Notes:

Unless otherwise stated, all parameters are specified at 230 VAC input voltage, 50 Hz, ambient temperature 25°C and relative humidity 70% for rated load output. The values of parameters related to the output voltage regulation is measured from low to high line or for load changes from 0 to 100%, respectively. The power supply is considered as an independent unit, but the final equipment still need to reconfirm that the whole system complies with the EMC directives. If the PSU is installed in the final device as a subassembly, the tests should be repeated to verify that the system has been met compliance. Detailed technical data are available on request.

BLOCK DIAGRAM

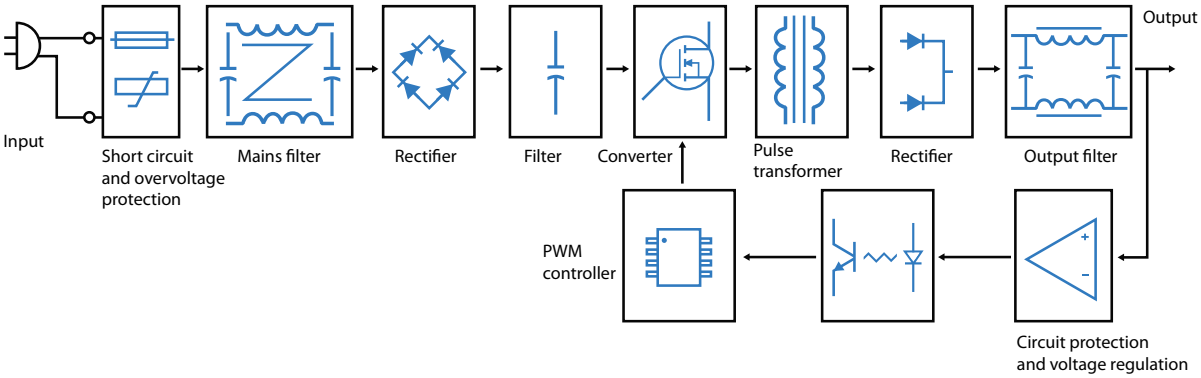

MECHANICAL SPECIFICATION

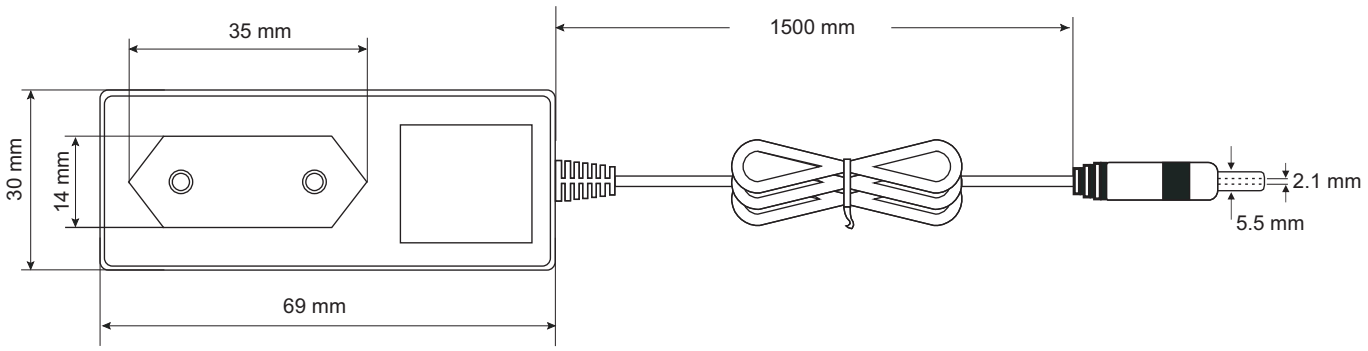

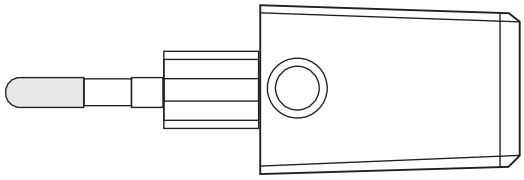

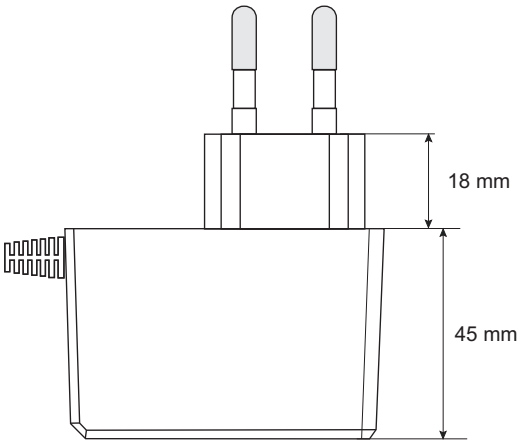

PRODUCT LABEL

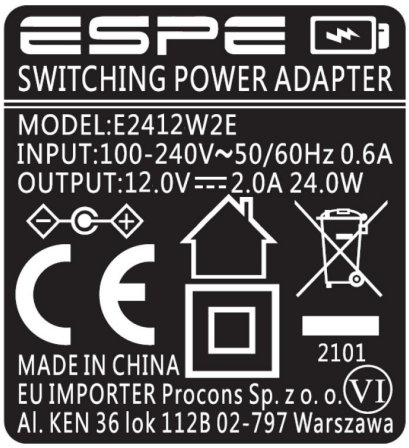

Legend to the label icons:

- II safety class: no grounding is required, no dangerous voltage even in an emergency situation will appear on output
- power supply intended for indoor use only
- VI – high efficiency and low no load power consumption, meeting the requirements of Energy Star Compliance Level 6 and ErP
- polarization: plus in the middle, minus outside
- the product must not be disposed of in normal waste containers

MARKING SYSTEM

E2412W2E

- Mains plug **W2E**
- Rated output voltage **12 V**
- Output power **24 W**
- Family **E**