KV2-TMH Series 30W

Whole Family: KV2-XX030-TMH (XX=12/24/48VDC) [10W 15W 20W 25W 30W 36W 40W]

IP20 SELV

RoHS

Reach

Features

Output:	Constant Voltage
Range:	220-240VAC
PFC design:	Built-in active PFC function
Efficiency:	Up to 84%
Protections:	Short circuit / Over load / Over temperature
Heat dissipation:	Cooling by free air convection
Waterproof performance:	IP20 can be used indoor.
Dimming function	Phase dimming: work with leading edge and trailing edge, TRIAC dimmers.
	0-10V dimming: 0-10V/1-10V/Potentiometer/10V PWM 4 in 1.
Dimming range:	0-100% dimming depth 1%
Min load:	Min load is 10%.
Application:	Suitable for the application of LED lighting
Warranty:	5 years warranty
Others:	Output frequency 20K Hz PWM, flicker-free
	Default: Leading edge

Specification

Model		KV2-12030-TMH	KV2-24030-TMH	KV2-48030-TMH
Certificate		CE / UKCA / SELV / RoHS / Reach		
Output	DC Voltage	12V	24V	48V
	Rated current	2.5A	1.25A	0.625A
	Rated power	30W		
	Voltage Tolerance	±0.5V		
Input	Voltage Range	220-240VAC		
	Frequency Range	50 / 60Hz		
	Power Factor @ full load	>0.9		
	THD(Typ.) @ full load	<25%		<30%
	Efficiency @ full load	>78%@230VAC	>81%@230VAC	>84%@230VAC
	AC Current (Max.)	0.16A		
	Inrush Current (Typ.)	6.9A, 5.2us @50%Ipeak 230VAC		
	Dip switch	ON: Leading Edge dimming 1: Trailing Edge dimming		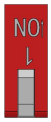
Protection	Short Circuit	Hiccup mode, recovers automatically after fault condition is removed.		
	Over Load	105%~120% Hiccup mode, recovers automatically after fault condition is removed.		
	Over temperature	Ambient temperature over 45℃±5℃, output reduce to 50%; Ambient temperature over 55℃±5℃, output off; When the temperature is reduced to 40℃±5℃ the output returns to 100%.		
Environment	Working TEMP. (Ta)	-40~+40℃ (see below derating curve)		
	Case Temperature (Tc)	90℃		
	Working Humidity	20 - 90%RH non-condensing		
	Storage TEM.,Humidity	-40 - +80℃,10 - 95% RH non-condensing		
	TEMP.coefficient	±0.03%/℃(0 - 50℃)		
	Vibration	10-500Hz, 2G 12 minutes/cycle, X, Y, Z axes each 72 minutes		
Safety & EMC	Safety standards	EN61347-1; EN61347-2-13		
	Withstand voltage	I/P-O/P:3.75KVAC		
	Isolation resistance	I/P-O/P:100MΩ / 500VDC / 25℃ / 70% RH		
	EMC Immunity	EN61547; EN61000-4-2,3,4,5,6,11		
	EMC Emission	EN55015; EN61000-3-2,3		
	Surge Immunity Test	AC Power Line: Differential Mode 1KV		
Others	Net Weight	0.17KG		
	Dimension	74.4*66.4*24mm(Φ*W*H)		
	Packing	435*287*190mm 100pcs/CTN		
Notes	1. All parameters NOT specially mentioned are measured at rated load for 230VAC and 25℃of ambient temperature. 2. Derated output is required at low input voltage to ensure long service life.			

Efficiency Curve (efficiency vs output load)

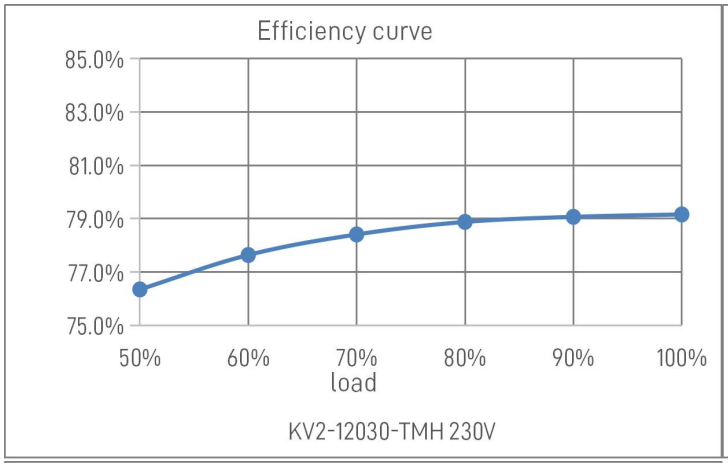

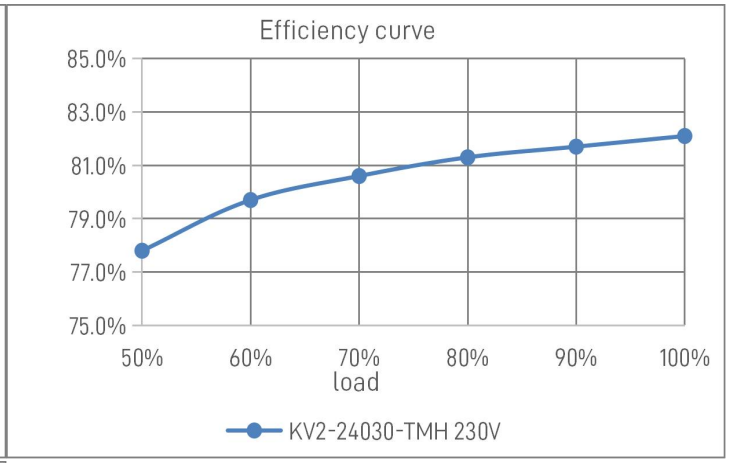

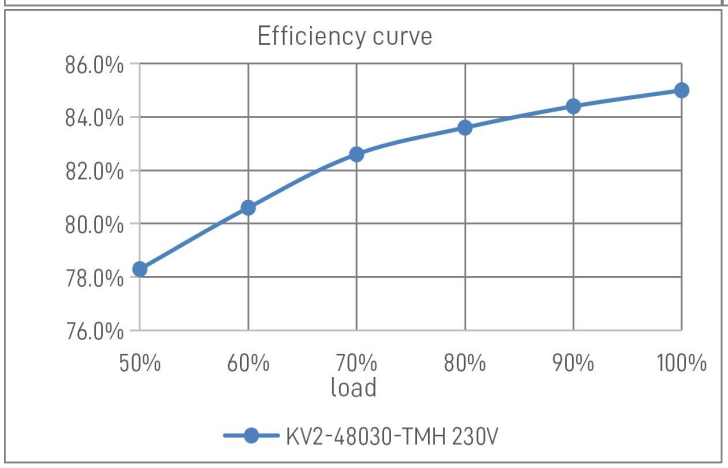

Power Factor Curve (power factor vs output load)

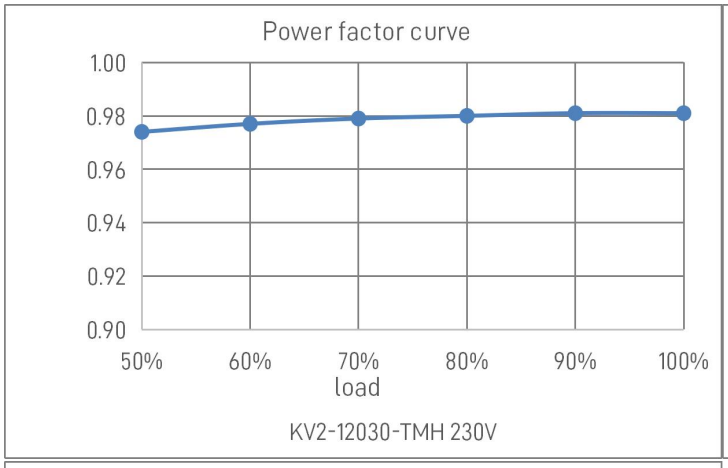

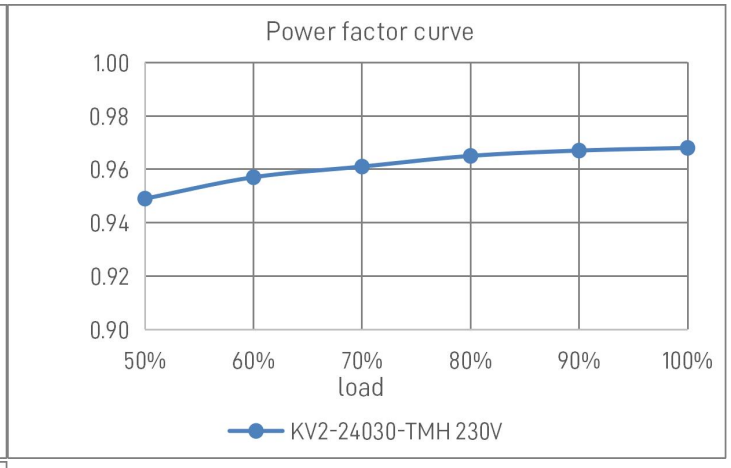

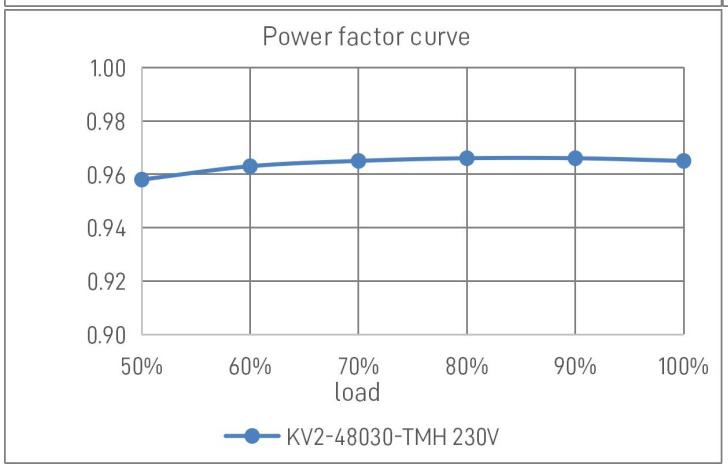

Derating Curve (output load vs TEMP.)

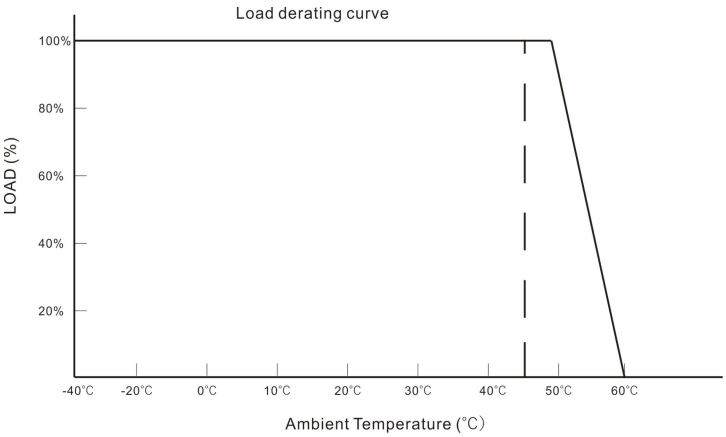

1. To extend their life, please refer to the Derating Curve and derate according to the temperature.
2. Please note that the rise in temperature of LED fixtures over a long period of time will cause their power to rise. Therefore, we recommend the power supply to reserve a certain amount of load to avoid overloading.

Mechanical Specification

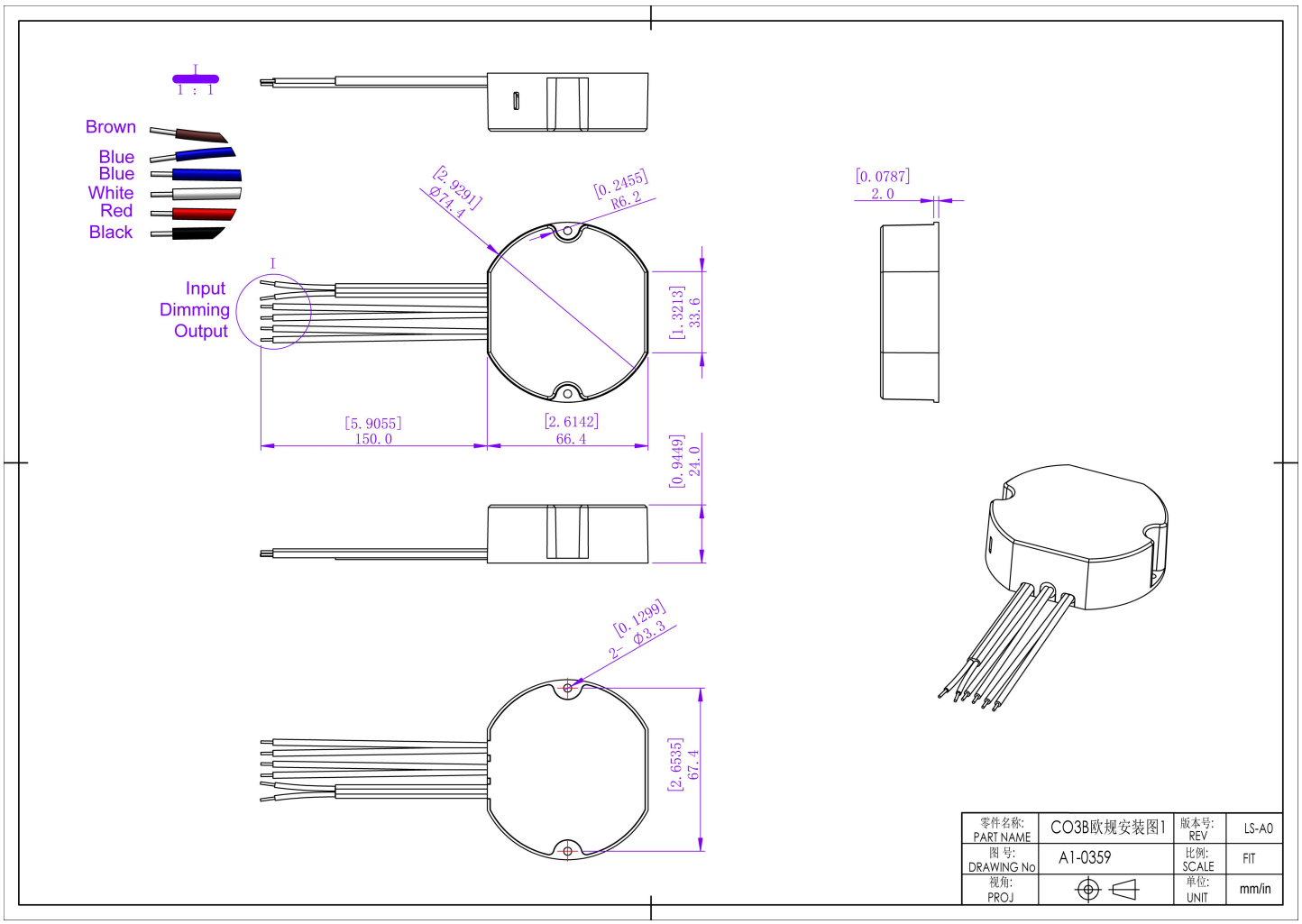

European wire gauge	
CO3B	
Input wire	Brown(L) Blue(N) (2*0.75mm^2)
Output wire	Red(V+) Black(V-) (2*0.326mm^2)
Dimming wire	Blue(DIM+) White(DIM-) (2*0.326mm^2)

Warm tip:

Any other requests for cable, we can customize.

Dimming Operation and Connecting Diagram

Using two ways of dimming at the same time, you must be assured that LED lighting is up to the max. Brightness then you could operate with the other dimming;

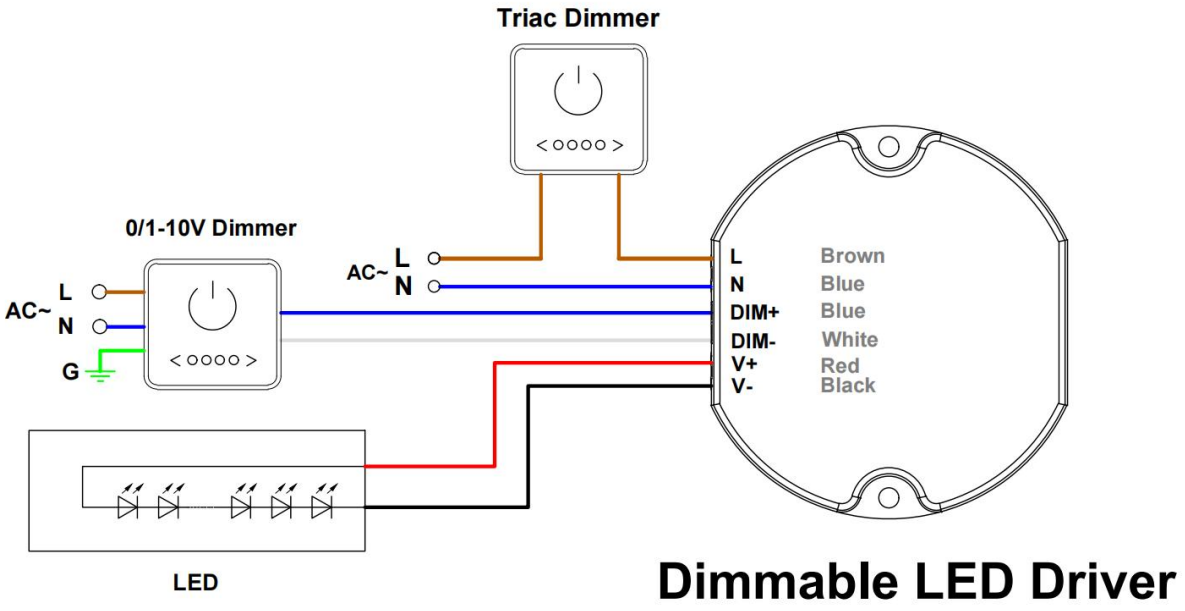

Using one dimming ---TRIAC/Phase cut dimming

1. The Pulse-Width Modulation (PWM) of output voltage can be adjusted through input terminal of the AC phase line(L) by connection a phase /Triac dimmer or lighting system.
2. Working with leading edge and trailing edge, TRIAC dimmers.
3. Min. loading is about 10%.
4. Please try to use dimmers with power at least 1.5 times as the output power of the driver.

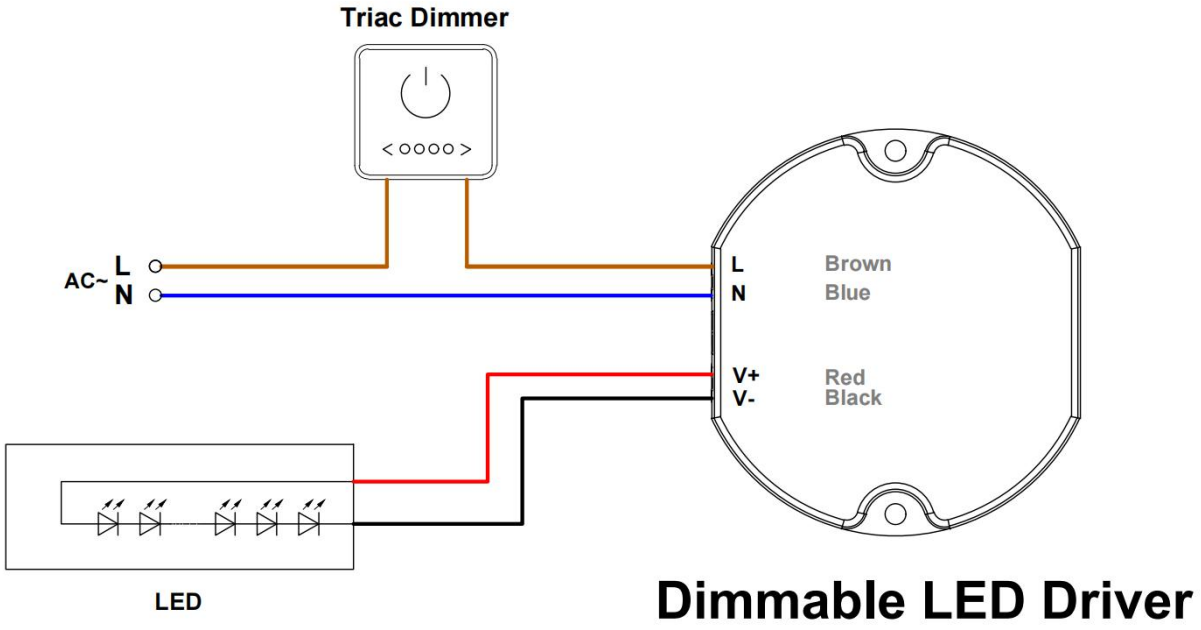
Triac Dimmer
AC~
L
N
L
N
V+
V-
Brown
Blue
Red
Black
LED
Dimmable LED Driver

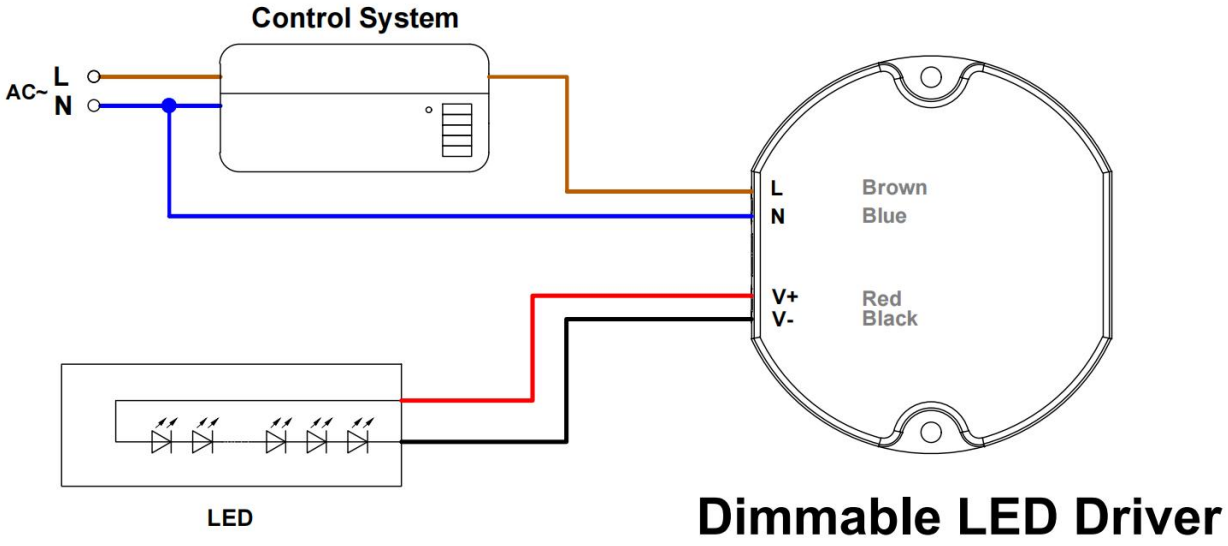
Control System
AC~
L
N
L
N
V+
V-
Brown
Blue
Red
Black
LED
Dimmable LED Driver

Using one dimming ---0-10/ 1-10V/ 10V PWM/ Potentiometer dimming

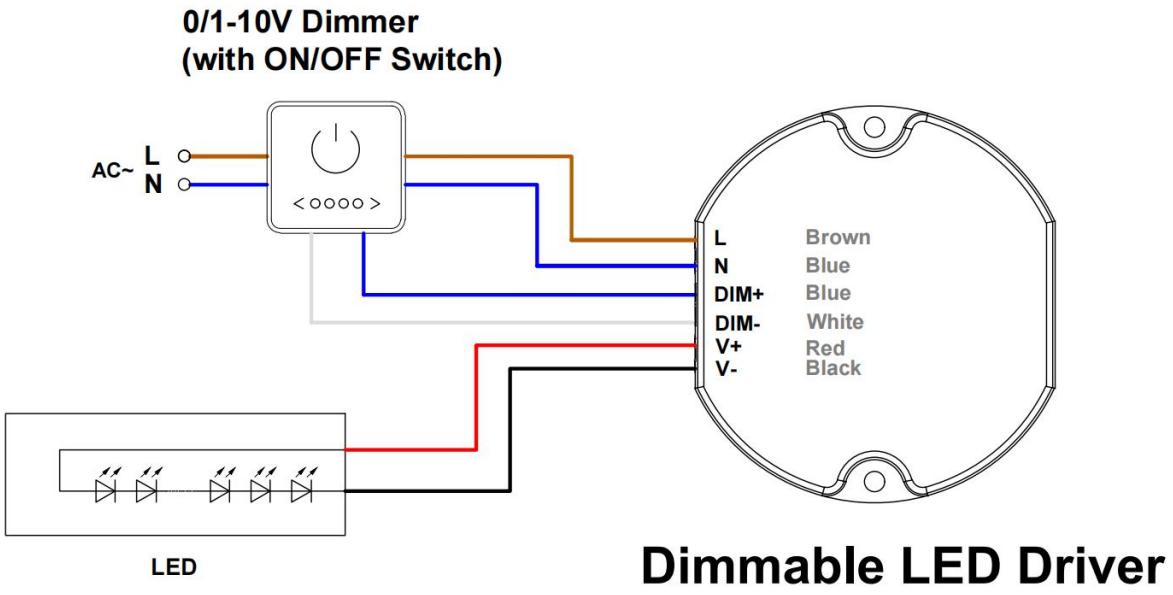

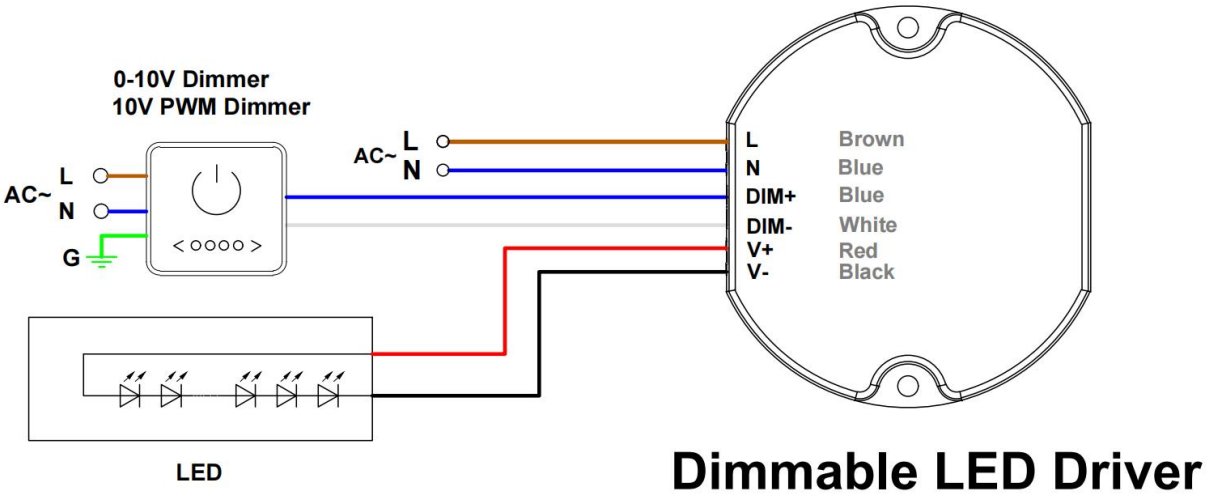

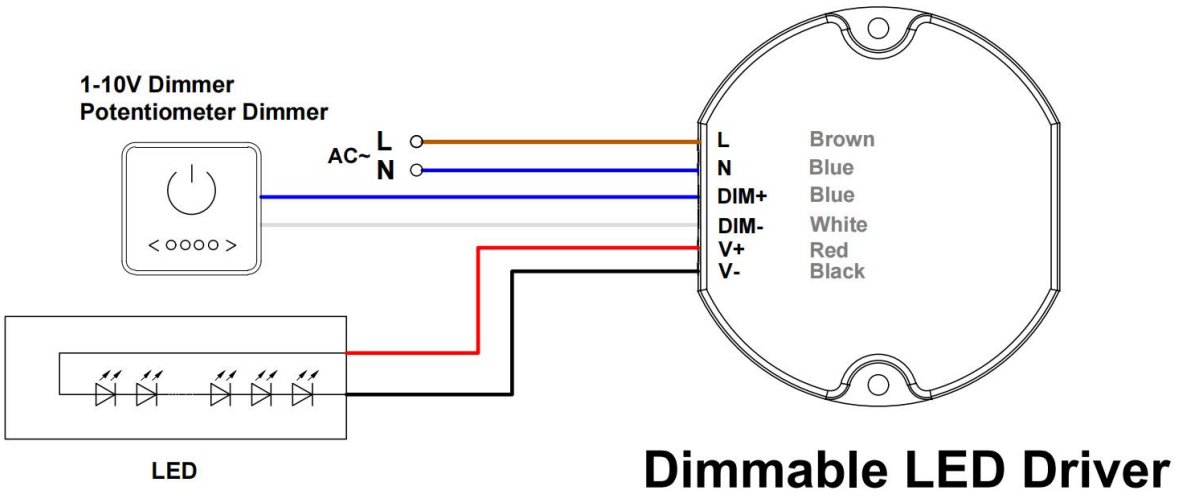

Instructions

1. This driver should be installed by qualified and professional person.
2. Please make sure the driver is installed with adequate ventilation around it to allow for heat dissipation.
3. Ensure that wiring is correct before test in order to avoid light and power supply damage.
4. If driver cannot work normally, don't maintain privately.

Have any questions, please contact Zhuhai Shengchang.

Please visit our website or contact us for more information! www.scpower.net.cn/en