500W AC/DC High Reliable Multi-Industries Encolsed Type Power Supply NSP-500 series

User's Manual

IEC62368-1
IEC61558-1/-2-16
IEC61010-1/-2-201
IEC60601-1
IEC60335-1
IEC62477-1

BS EN/EN62368-1
BS EN/EN61558-1/-2-16
BS EN/EN61010-1/-2-201
BS EN/EN60601-1
BS EN/EN60335-1
BS EN/EN62477-1

UL62368-1
ANSI/AAMI ES60601-1

LISTED
UL61010-1

AS/NZS61558-1/-2-16
AS/NZS62368-1

GB4943.1

CNS15598-1

KC62368-1
(By request)

IS13252
(By request)

TPTC004

ECO | Automate | Industrial | Security | Network | Telecom | Household | Medical | 2xMOPP | BF rated

Features

- 85~305Vac input with PFC(277Vac available)
- No load power consumption<0.75W by R.C.
- Global certificates in multi-fields (ITE 62368-1, Medical 60601-1, Household 60335-1, Industrial 61558-1/2-16/61010-1, Energy converter 62477-1)
- 200% peak power capability(12~60V models)
- High efficiency up to 95%
- -40~85℃ wide range operation temperature(> +60℃ derating)
- Extremely low leakage current<350μA, 2 x MOPP, suitable for BF medical applications
- Built-in constant current limiting circuit
- Protections: Short circuit / Overload / Over voltage / Over temperature
- Forced air cooling by built-in DC fan with noise <45dB and fan ON/OFF control
- Built-in Remote ON/OFF control/Remote Sense/ DC OK signal
- Over voltage category Ⅲ (OVC Ⅲ)
- Operating altitude up to 5000 meters
- Conformal coating
- 5 years warranty

Applications

- Industrial automation machinery/ control system
- Security system
- Mechanical and electrical equipment
- Electronic instruments, equipments orapparatus
- Network equipment
- Telecom devices
- Power sourcing equipment of PoE
- Home automation
- Medical devices
- Charging application

GTIN CODE

MW Search: https://www.meanwell.com/serviceGTIN.aspx

Description

The NSP-500 series is a 500W AC/DC power supply with PFC function, designed for high reliability and suitable for multiple industries. Key features include: compact size (199*99*41 mm) for better space utilization in system installations, ultra-wide input range of 85~305Vac for global compatibility, up to 95%efficiency and low standby power consumption (<0.75W)for energy-saving and carbon reduction, constant current design with 200% peak power capability,wide operating temperature range from -40 to +85°C (+60°C at full load), compliance with OVCIII, built-in Remote Control /Remote Sense/DC OK signal, internal PCB coating, complete protections, certifications for multiple safety standards including 62368-1, 60601-1, 61558-1, 60335-1, 62477-1, and 61010-1, as well as 2 X MOPP compliance and extremely low leakage current (<350μA).It is suitable for BF-rated medical equipment and comes with a 5-years warranty, making it a highly cost-effective solution for industrial power supply needs.

Model Encoding

NSP -500- 24

- 24 — Output voltage (5V/12V/15V/24V/27V/36V/48V/60V)
- 500 — Output wattage
- NSP — Series name

MEAN WELL

500W AC/DC High Reliable Multi-Industries Encolsed Type Power Supply **NSP-500 series**

SPECIFICATION		NSP-500-5	NSP-500-12	NSP-500-15	NSP-500-24	NSP-500-27	NSP-500-36	NSP-500-48	NSP-500-60
OUTPUT									
DC VOLTAGE		5V	12V	15V	24V	27V	36V	48V	60V
RATED CURRENT		90A	42A	33.4A	21A	18.6A	13.9A	10.5A	8.4A
CURRENT RANGE		0 ~ 90A	0 ~ 42A	0 ~ 44.4A	0 ~ 21A	0 ~ 18.6A	0 ~ 13.9A	0 ~ 10.5A	0 ~ 8.4A
RATED POWER		450W	504W	501W	504W	502.2W	500.4W	504W	504W
PEEK	CURRENT(5 sec.)	N/A	84A	66.7A	41.7A	37A	27.8A	20.8A	16.7A
	POWER(5 sec.)	N/A	1000W	1000W	1000W	1000W	1000W	1000W	1000W
RIPPLE & NOISE (max.) Note.2		200mVp-p	200mVp-p	200mVp-p	240mVp-p	240mVp-p	240mVp-p	240mVp-p	300mVp-p
VOLTAGE ADJ. RANGE		4.7 ~ 5.5V	10.8 ~ 14V	15 ~ 19V	21 ~ 26V	26 ~ 32V	32 ~ 43V	44 ~ 57V	54 ~ 72V
VOLTAGE TOLERANCE Note.3		±2.0%	±2.0%	±2.0%	±1.0%	±1.0%	±1.0%	±1.0%	±1.0%
LINE REGULATION		±0.5%	±0.5%	±0.5%	±0.5%	±0.5%	±0.5%	±0.5%	±0.5%
LOAD REGULATION		±1.0%	±0.5%	±0.5%	±0.5%	±0.5%	±0.5%	±0.5%	±0.5%
SETUP, RISE TIME		1500ms, 80ms/115Vac 1000ms, 80ms/230Vac 900ms, 80ms/277Vac							
HOLD UP TIME (Typ.)		16ms at full load							
INPUT									
VOLTAGE RANGE Note.4		85 ~ 305Vac 120 ~ 431Vdc							
NO LOAD POWER CONSUMPTION(Typ.)	Remote Power OFF	0.75W/115Vac 0.75W/230Vac 0.75W/277Vac							
	Remote Power ON	3.3W/115Vac 3W/230Vac 3W/277Vac							
FREQUENCY RANGE		47 ~ 63Hz							
POWER FACTOR (Typ.)		PF>0.98/115Vac, PF>0.93/230Vac, PF>0.9/277Vac at full load							
EFFICIENCY (Typ.)		90%	92%	92%	94%	94%	94.5%	95%	95%
AC CURRENT (Typ.)		5.3A/115Vac 2.6A/230Vac 2.2A/277Vac							
INRUSH CURRENT (Typ.)		COLD START 20A/115Vac 40A/230Vac 50A/277Vac							
LEAKAGE CURRENT		Earth leakage current <350μA(rms)@277Vac, touch current<100μA(rms) @ 277Vac							
PROTECTION									
SHORT CIRCUIT		5V	Constant current limiting for more than 5 seconds (Vout<30%) and then hiccup mode, recovers automatically after faul condition is removed						
		12V ~ 60V	Constant current limiting for more than 5 seconds (Vout<30%) and then shut down o/p voltage, AC re-power on to recover or Hiccup mode, recovery automatically after fault conditon is removed. Depends on the user's wire impedance						
OVERLOAD		5V	105%~150% rated output power; Constant current limiting for more than 5 seconds and then recovers automatically after fault condition is removed						
		12V ~ 60V	Normally works within 105 ~ 200% rated output power for more than 5 seconds and then constant current limiting without shutdown(Vout>30%), recovers automatically after fault condition is removed, or shut down o/p voltage when Vout<30%,AC re-power on to recover						
			>200% rated power, constant current limiting (Vout>30%)with auto-recovery after fault condition is removed, or shut down o/p voltage when Vout<30%,AC re-power on to recover						
OVER VOLTAGE		5.8 ~ 7.5V	15 ~ 19V	20 ~ 25V	28 ~ 36V	33~ 42V	44 ~ 54V	58~ 70V	73~ 86V
		Protection type : Shut down o/p voltage, AC re-power on to recover							
OVER TEMPERATURE		Shut down o/p voltage, AC re-power on to recover							
FUNCTION									
REMOTE CONTROL		POWER ON: RC+~RC- 0~0.8Vdc or open , POWER OFF: RC+~RC- 3.3~10Vdc by eternal voltage							
REMOTE SENSE		Compensate voltage drop on the load wiring up to 0.3V. Please refer to the Function Manual							
DC OK SIGNAL		By phototransistor contact rating(max.):15Vdc/10mA resistive load. Please refer to the Function Manual.							
FAN NOISE(Typ.)		Fan ON/OFF control, RTH3≥50℃ ±10℃ FAN ON ; RTH3≤40℃ ±10℃ FAN OFF							
		45dB							
ENVIRONMENT									
WORKING TEMP.		-40 ~ +85℃ (Refer to "Derating Curve")							
WORKING HUMIDITY		20 ~ 90% RH non-condensing							
STORAGE TEMP., HUMIDITY		-40 ~ +85℃, 10 ~ 95% RH non-condensing							
TEMP. COEFFICIENT		±0.05%/℃ (0 ~ 60℃)							
VIBRATION		10 ~ 500Hz, 2G 10min./1cycle, 60min. each along X, Y, Z axes							

SPECIFICATION	NSP-500-5	NSP-500-12	NSP-500-15	NSP-500-24	NSP-500-27	NSP-500-36	NSP-500-48	NSP-500-60
SAFETY & EMC Note 6								
SAFETY STANDARDS	CB IEC62368-1, IEC60335-1, IEC61558-1/-2-16, IEC61010-1/-2-201, IEC60601-1; IEC62477-1 DEKRA BS EN/EN62368-1, BS EN/EN60335-1, BS EN/EN61558-1/-2-16, BS EN/EN61010-1/-2-201, BS EN/EN60601-1(3.2 Version);BS EN/EN62477-1 UL UL62368-1, ANSI/AAMI ES60601-1(3.2 Version),UL61010-1/-2-201 RCM AS/NZS 62368-1, AS/NZS 61558-1/-2-16 CCC GB4943.1 BSMI CNS15598-1,BIS IS13252(Part1): 2010/IEC 60950-1 : 2005(except for 48V/60V) EAC TP TC 004 approved; KC KC62368-1 certified and BIS IS13252 (Part 1):2010 certified, no, no stock, contact sale for inquires							
ISOLATION LEVEL Note 8	Primary-Secondary: 2xMOPP, Primary-Earth: 1xMOPP, Secondary-Earth: 1xMOPP							
OVER VOLTAGE CATEGORY	IEC/EN 61558-1/-2-16 (OVC III, altitude up to 2000M) IEC/EN/UL 62368-1 (OVC II , altitude up to 5000M) IEC/EN 60335-1 (OVC II , altitude up to 5000M) IEC/EN 60601-1 (OVC II , altitude up to 4000M) IEC/EN 61010-1/-2-201 (OVC II , altitude up to 5000M) IEC/EN 62477-1 (OVC II , altitude up to 5000M)							
SAFETY EXTRA-LOW VOLTAGE(SELV)	IEC/EN 61558-2-16 (SELV, 5 ~ 36V) IEC/EN 60335-1 (SELV, 5 ~ 36V) IEC/EN/UL 62368-1 (SELV/ES1, 5 ~ 36V)							
WITHSTAND VOLTAGE	I/P-O/P:4.2KVac I/P-FG:2.1KVac O/P-FG:1.5KVac							
ISOLATION RESISTANCE	I/P-O/P, I/P-FG, O/P-FG:100M Ohms / 500VDC / 25℃/ 70% RH							

	Parameter	Standard	Test Level / Note
EMC EMISSION	Conducted	BS EN/EN55032(CISPR32),CNS 15936	Class B
		BS EN/EN55014-1(CISPR14-1)	
		BS EN/EN55011(CISPR11)	Class B
	Radiated	BS EN/EN55032(CISPR32),CNS 15936	Class B
		BS EN/EN55014-1(CISPR14-1)	
		BS EN/EN55011(CISPR11)	Class B
	Harmonic Current	BS EN/EN61000-3-2(IEC61000-3-2)	Class A
	Voltage Flicker	BS EN/EN61000-3-3(IEC61000-3-3)	-----
	BS EN/EN55035(CISPR35),BS EN/EN61000-6-2(IEC61000-6-2),BS EN/EN60601-1-2(IEC60601-1-2), BS EN/EN55014-2(CISPR14-2)		
EMC IMMUNITY	**Parameter**	**Standard**	**Test Level / Note**
	ESD	BS EN/EN61000-4-2	Level 4, 15KV air ; Level 4, 8KV contact
	Radiated	BS EN/EN61000-4-3	Level 3, 10V/m(80MHz~2.7GHz) Table 9, 9~28V/m(385MHz~5.78GHz)
	EFT / Burst	BS EN/EN61000-4-4	Level 3, 2KV
	Surge	BS EN/EN61000-4-5	Level 4, 2KV/Line-Line 4KV/Line-Earth
	Conducted	BS EN/EN61000-4-6	Level 3, 10V
	Magnetic Field	BS EN/EN61000-4-8	Level 4, 30A/m
	Voltage Dips and Interruptions	BS EN/EN61000-4-11	>95% dip 0.5 periods, 30% dip 25 periods, >95% interruptions 250 periods

OTHERS								
MTBF	1213.4 K hrs min. Telcordia SR-332 (Bellcore) ; 212.1K hrs min. MIL-HDBK-217F (25℃)							
DIMENSION (L*W*H)	**199*99*41mm**							
PACKING	1Kg;12pcs/13Kg/0.72 CUFT							

NOTE

1. All parameters NOT specially mentioned are measured at 230Vac input, rated load and 25℃ of ambient temperature.
2. Ripple & noise are measured at 20MHz of bandwidth by using a 12" twisted pair-wire terminated with a 0.1uF & 47uF parallel capacitor.
3. Tolerance: includes set up tolerance, line regulation and load regulation.
4. Derating may be need under low input voltages. Please refer to "STATIC CHARACTERISTIC" sections for details.
5. The ambient temperature derating of 3.5℃/1000m with fanless models and 5℃/1000m with fan models for operating altitude higher than 2000m(6500ft)..
6. The power supply is considered a component which will be installed into a final equipment. All the EMC tests are been executed by mounting the unit on a 360mm*360mm metal plate with 1mm of thickness. The final equipment must be re-confirmed that it still meets EMC directives. For guidance on how to perform these EMC tests, please refer to "EMI testing of component power supplies." (as available on https://www.meanwell.com//Upload/PDF/EMI_statement_en.pdf)
7. RCM is on voluntary basis and meets relevant IEC or AS/NZS standards complying with AS/NZS 4417.1.
8. MOPP is suitable for 100-240Vac input only.

※ Product Liability Disclaimer: For detailed information, please refer to https://www.meanwell.com/serviceDisclaimer.aspx

■ Block Diagram

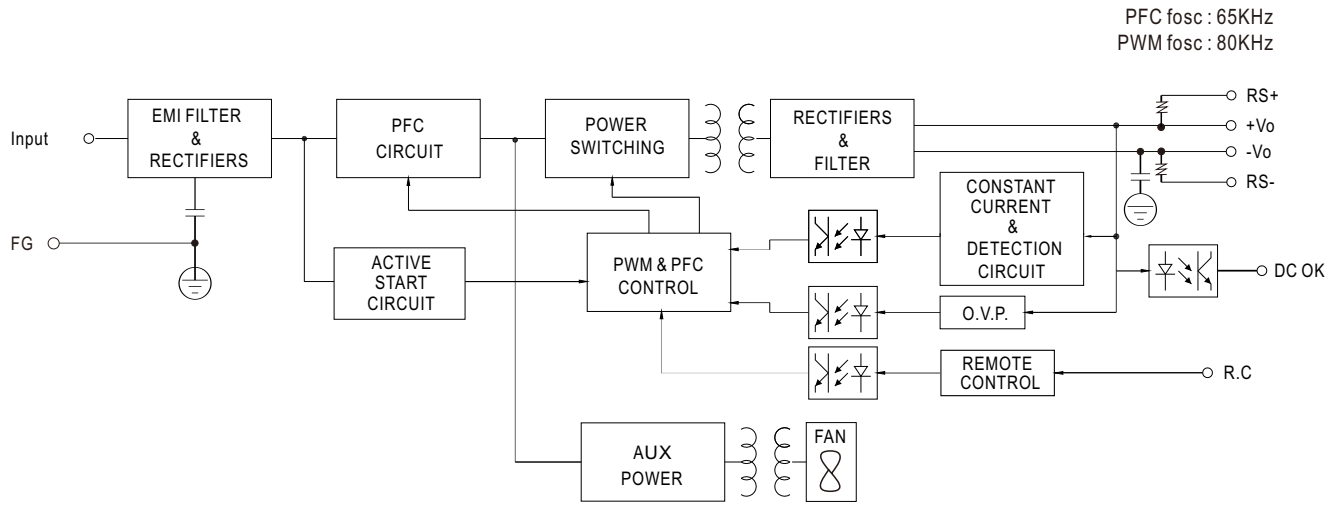

■ Derating Curve

Suitable for 100/110/115/120Vac System
(85~135Vac)

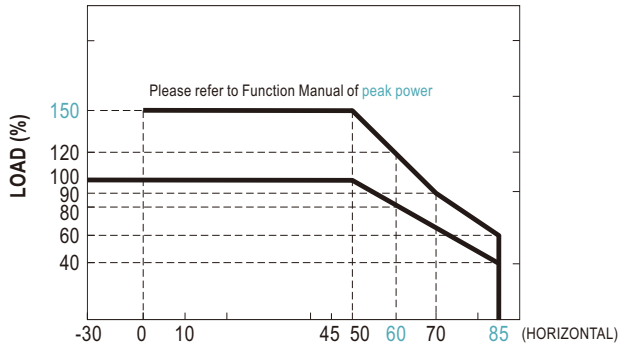

AMBIENT TEMPERATURE (℃)

Note: Below 100Vac @-30℃ there may be a restart situation within 3 seconds after power-on

Suitable for 220/230/240/277Vac System
(180~305Vac)

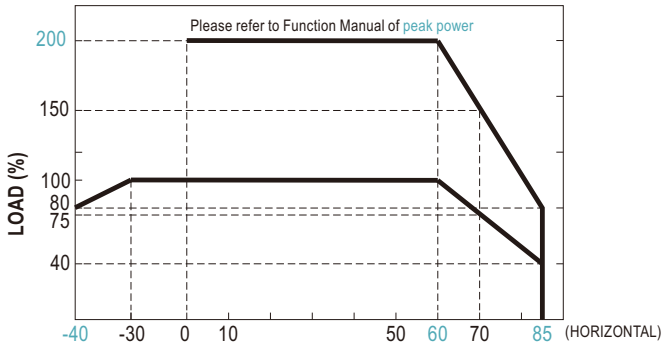

AMBIENT TEMPERATURE (℃)

■ Output Derating vs Input Voltage

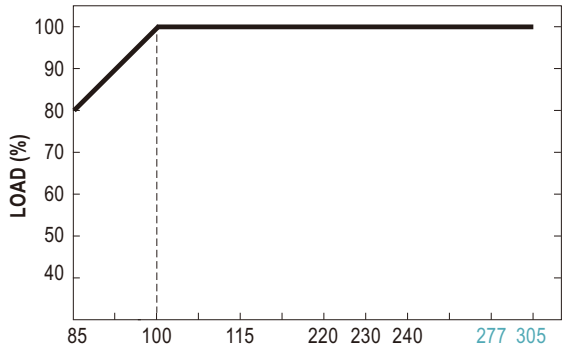

INPUT VOLTAGE (Vac) 60Hz

■ Funtion Manual

1. Peak Power

$$P_{av} = \frac{P_{pk} \times t + P_{npk} \times (T-t)}{T} \leqslant P_{rated}$$

$$Duty = \frac{t}{T} \times 100\% \leqslant 35\%$$

$t \leqslant 5$ sec

P_{av} : Average output power (W)

P_{pk} : Peak output power (W)

P_{npk} : Non-peak output power (W)

P_{rated} : Rated output power (W)

t : Peak power width (sec)

T : Period (sec)

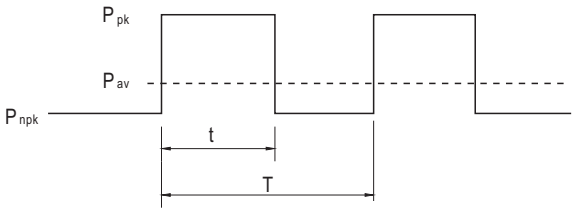

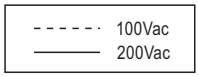

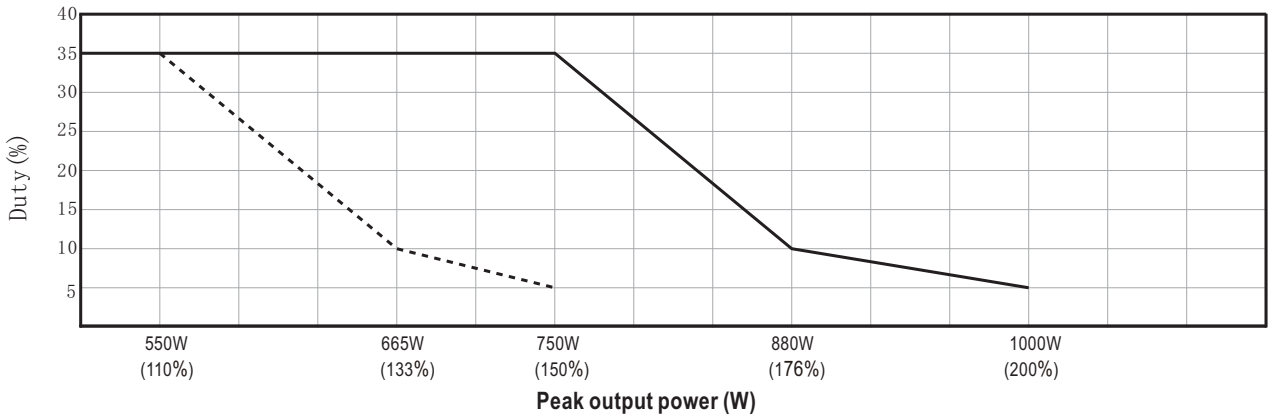

For example (24V model) :

Vin = 200Vac Duty_max = 5%

$P_{av} = P_{rated} = 500W$

$P_{pk} = 1000W$

$t \leqslant 5$ sec

$$T \geqq \frac{5\ sec}{5\%} \geqq 100sec$$

$$P_{npk} \leqslant \frac{T\,P_{av} - t\,P_{pk}}{T-t}$$

$P_{npk} \leqslant 473W$

Note: When the output voltage is adjusted to the upper limit, the peak power is 150% rated power.

2.Remote Control

The PSU can be turned ON/OFF by using the "Remote Control" function with external switch and auxiliary power.

PSU Vo Status	Between RC-(pin6) and RC+(pin5) on CN1
POWER ON	Keep 0~0.8Vdc or open
POWER OFF	Keep 3.3~10Vdc by external voltage

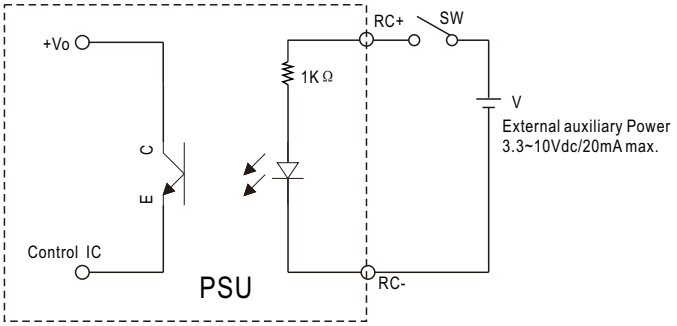

3.Remote Sense

The remote sensing compensates voltage drop on the load wiring up to 0.3Vdc.

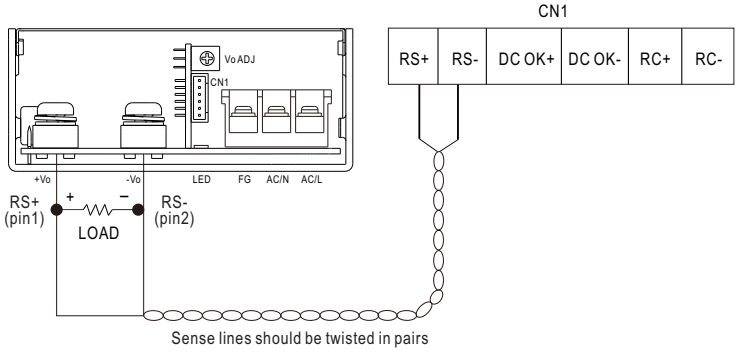

4.DC_OK signal

DC_OK is a collector shorted signal. It is used by an optocoupler in the power supply which indicates the output status of the power supply as exhibited below.

PSU Vo Status	Photo transistor
POWER ON	Conduct(Low impedance)
POWER OFF	Open(High impedance)

Optocoupler Rating(max.) 15Vdc/10mA resistive load

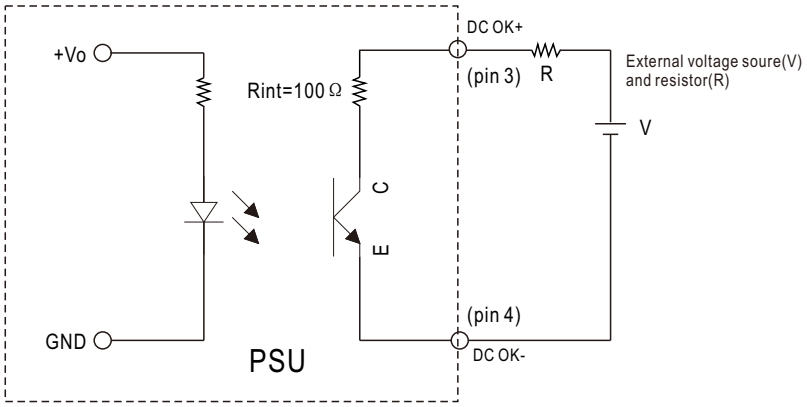

■ Mechanical Specification

(Unit: mm , tolerance ± 1mm)

Case No.215B

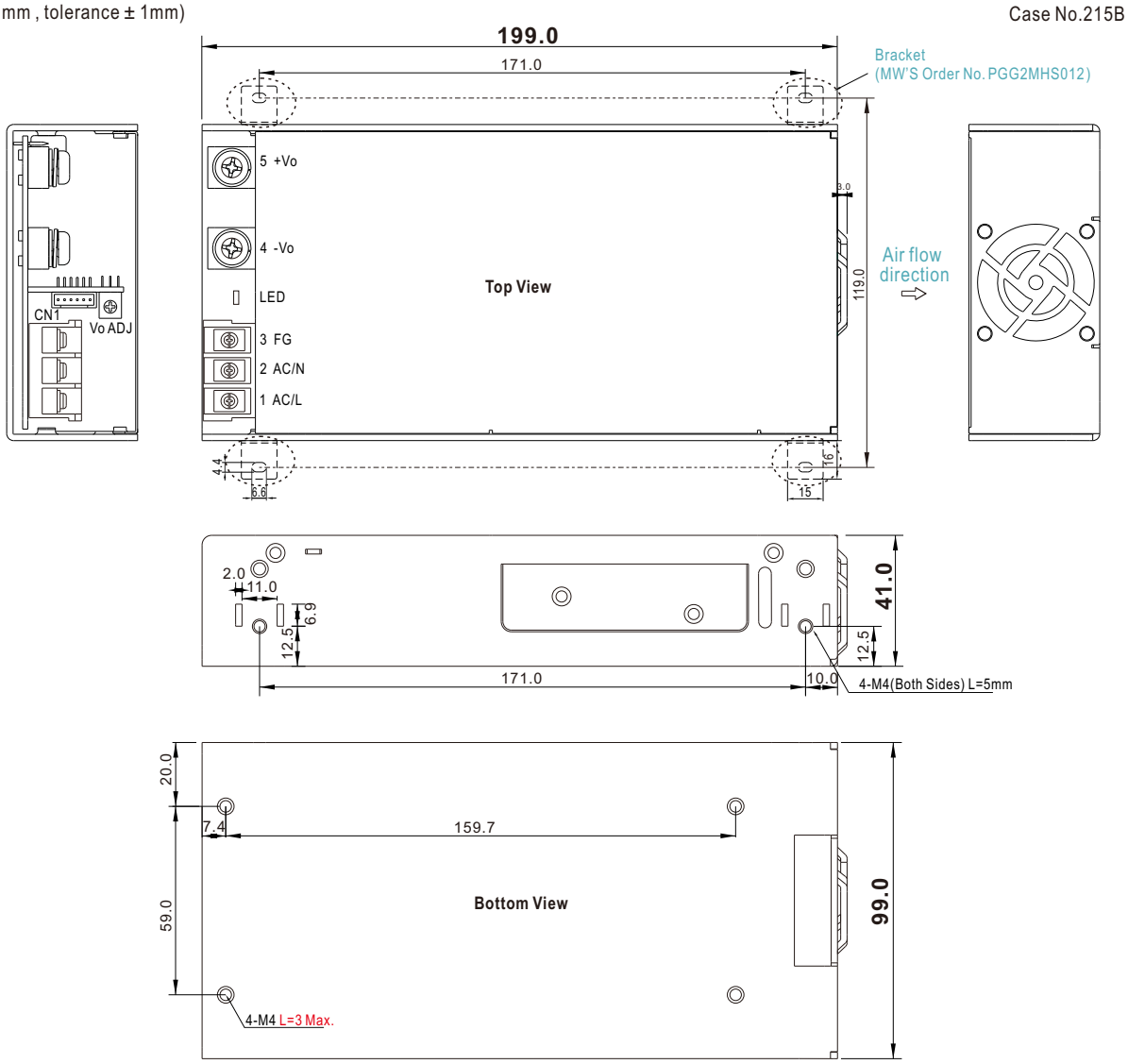

※ Connector Pin No. Assignment (CN1): DJS-1125R-06 or equivalent

Pin No.	Assignment	Mating Housing	Terminal
1	RS+	JS-11242-06 or equivalent	DJS-1125R-06 or equivalent
2	RS-		
3	DC OK+		
4	DC OK-		
5	RC+		
6	RC-		

※ AC Input Terminal Pin No. Assignment

Pin No.	Assignment	Diagram	Screw Size	Maximum mounting torque
1	AC/N or DC input -Vin	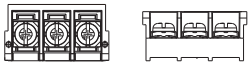	M3.5	10Kgf-cm
2	AC/L or DC input +Vin			
3	FG ⏚			

※ DC Output Terminal Pin No. Assignment

Pin No.	Assignment	Diagram	Screw Size	Maximum mounting torque
5	+Vo	For 5~15V models	M5	12Kgf-cm
4	-Vo	For 24~60V models	M4	

■ Accessory List

No.	Item		Quantity
1	Control function interface(CN1) mating wire along with NSP-320 (standard accessory)	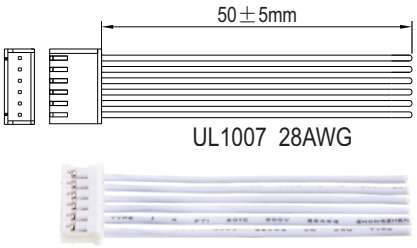	1pcs/per model
2	Bracket MW'S Order NO. :PGG2MHS012 (By request accessory,should ordered seperatey)	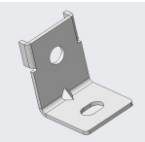	4pcs/per model (Please refer to Installation Diagram)
3	Terminal cover MW'S Order NO. : PEE4TBC-03 (By request accessory,should ordered seperatey)		1pcs/per model

■ Installation Diagram

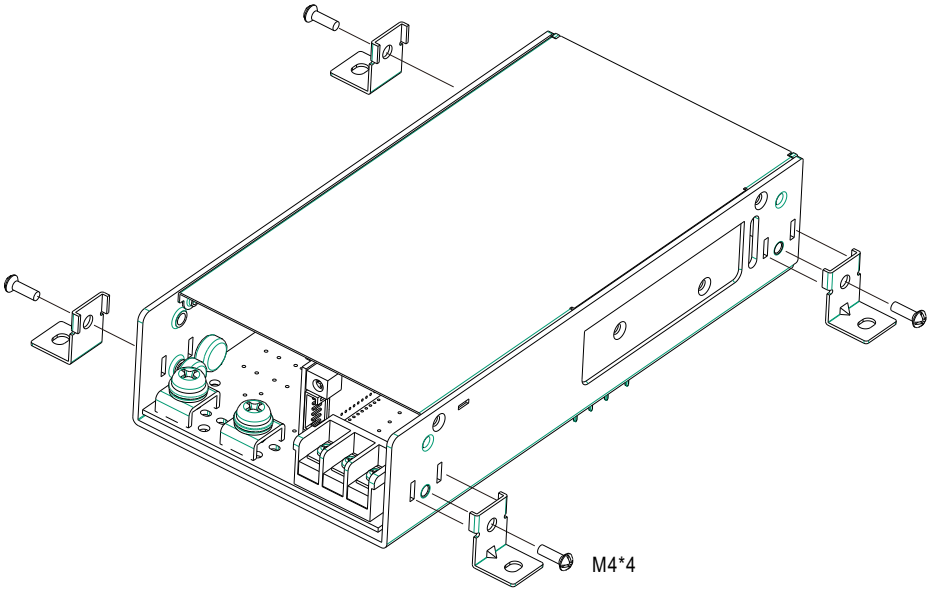

■ Installation Manual

Please refer to : http://www.meanwell.com/manual.html